Full Assembled

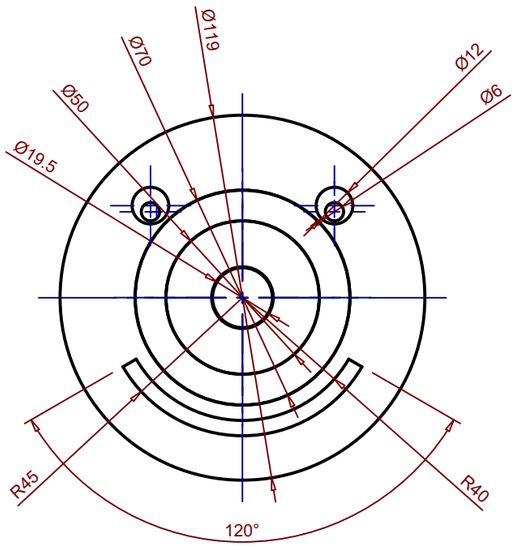

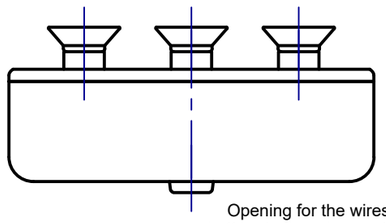

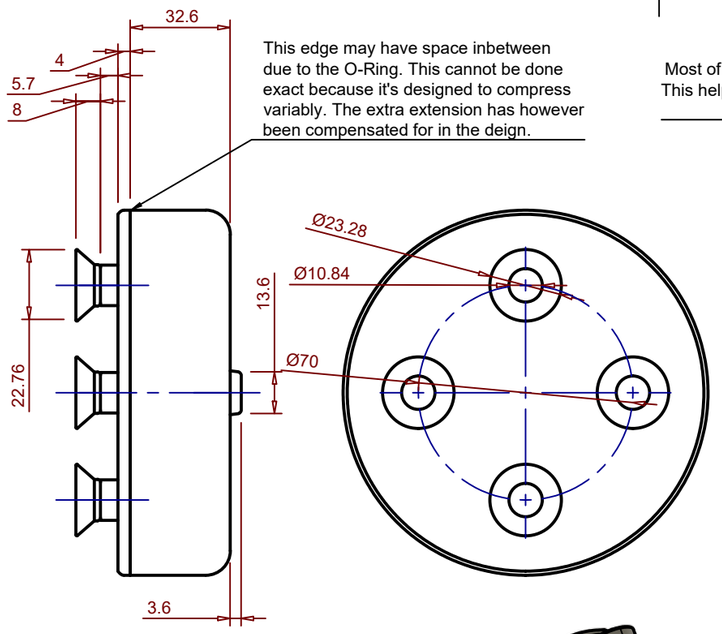

This edge may have space inbetween due to the O-Ring. This cannot be done exact because it's designed to compress variably. The extra extension has however been compensated for in the deign.

Most of the outer cover is made from one piece. This helps to make it more durable, more pieces means more possible fault locations.

Fillets on at least every exposed edge reduces the change of material being clipped off, as upon any impact, force is spread out over a bigger area due to the gradual change in direction of the fillet.

Full Exploded

Removable lid means it can be swapped / replaced in the event of it breaking or cracking. Making the product more enviromentally friendly.

PLA (Poly Lactic Acid) used in 3D printing these parts is also biodegradeable. Meaning the product doesn't pollute as badly as oil derived plastic forms. Any future injection molded versions will also have to use biodegradeable plastics though.

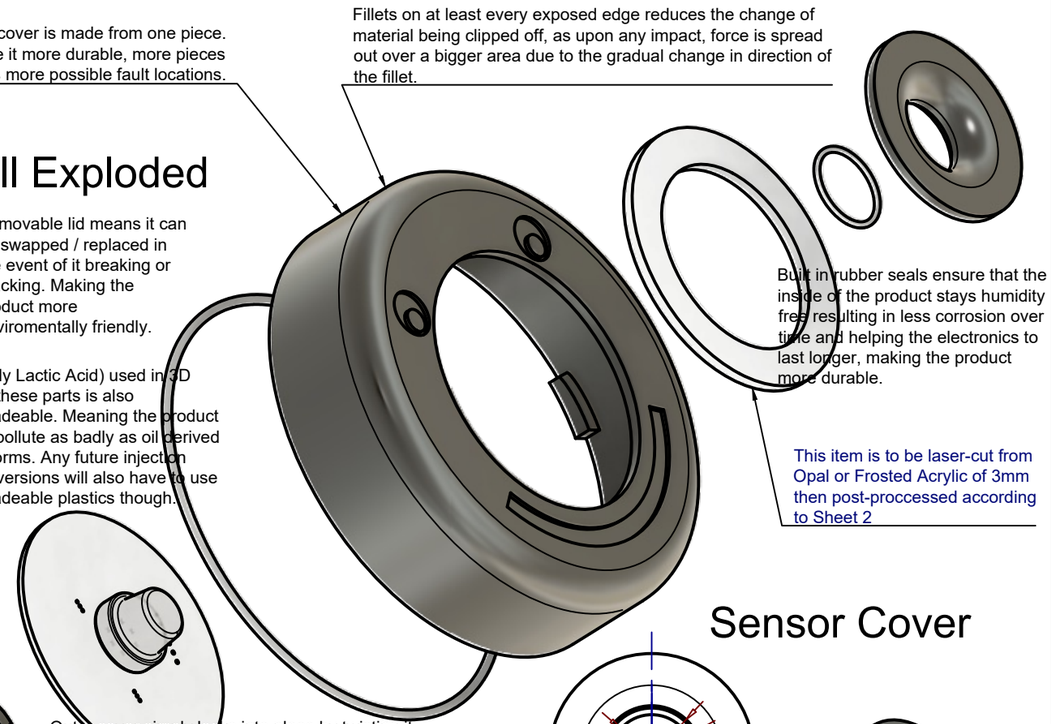

Built in rubber seals ensure that the inside of the product stays humidity free resulting in less corrosion over time and helping the electronics to last longer, making the product more durable.

This item is to be laser-cut from Opal or Frosted Acrylic of 3mm then post-proccessed according to Sheet 2

Design of the outermost sections ensure that the part slides into the outer lid easilly and without much effort, almost self-aligning itself.

Common AA batteries used instead of LiPo / Li-ion. This makes the product easier to use/change batteries for the user as they don't have to recharge a built in battery, only swap them. Meaning more constant use possible too.

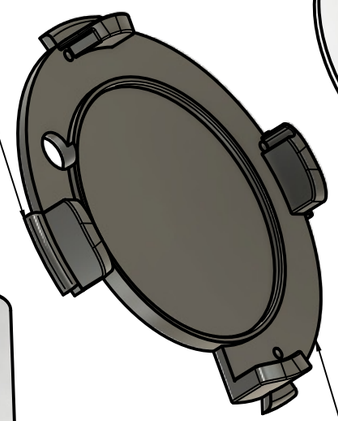

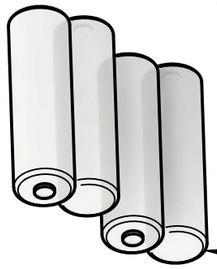

Outer cover simply locks into place by twisting it. Batteries also simply just slide in and the clip just needs pushing down and locked into place. Very easy to replace batteries and maintain meaning anyone can use it. Easy to read alertive red LEDs make the product also very easy to use and see when food has gone bad.

3D printed parts ensures complexity is achievable while also keeping price at an affordable level. Future versions could be injection molded to even further reduce cost.

All shaded items are to be 3D printed according to their specifications

All non shaded items are guide's only

AAs are also found commonly in households meaning they don't have to be included into the packaging, reducing upfront cost. The batteries themselves are also cheaper than LiPo or Li-ion

Having easy to swap batteries means the product is more reusable as well. Built-in batteries such as LiPo / Li-ion may degrade over time, this doesn't matter for removable batteries.

Pins line up and attach the plates togethor

Opening for the wires from the battery to the microcontroller and the top layer

Small housing designed for micro-controller removes an entire layer giving the product a much smaller profile

Covers give a more aesthetic look to the legs and also protects the bolts holding the suction cups from rust/oxidation leading to more durability and less chance of legs breaking off

Four suction cups provide strong adhesion to the fridge walls. Also easy to attach as only pressure has to be applied, no screws or actual adhesives needed.

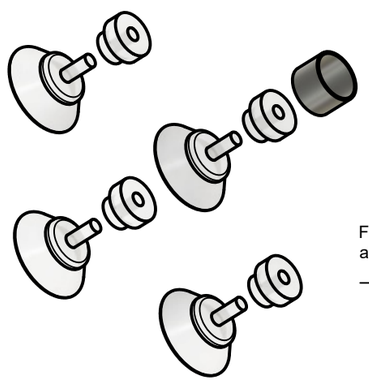

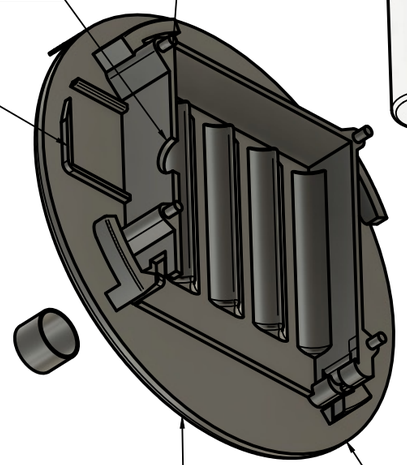

Fillets on exposed outer edges also means a lesser chance of any injury to the user, safer.

Epoxy glue most likely used inbetween all the parts as that is the best option for fridge conditions and most reliable. More inexpensive glues could be researcheed and used for mass production.

Self designed battery pack fits into the design and ensures reusability

Hinged door that clips in allows easy printing in desired orientation and can then just be clipped in so it's not lost

Sensor Cover

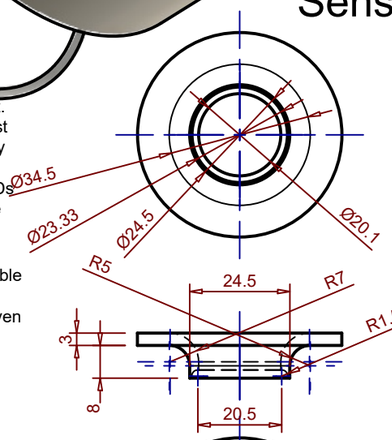

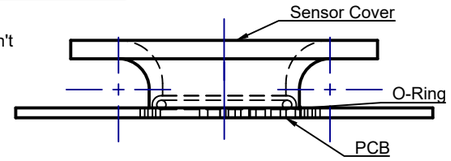

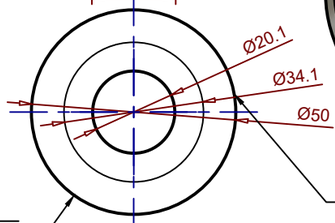

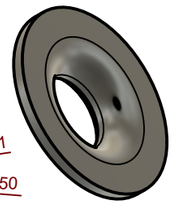

QC: 3D printed right way up to ensure clean layer transition on top fillet

Sand with 120-1000 grit paper to remove layer lines
Sand with 1000-5000 grit to completely smoothen surface
C

QC: Ensure material removal happens to top side, fillet and inside of cylinder

Dept.	Technical reference	Created by	Approved by
NEA		Eduard Brisca 18/12/2025	Ms. Dixon --/--/--
		Document type: WORKING DRAWING	Document status: Complete
		Title: Sensor Cover Full Exploded	DWG No.: NEA MAIN
			Rev. 5 / Date of issue 20/12/2025 / Sheet 1/3

Diffuser

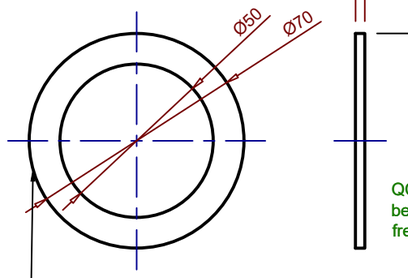

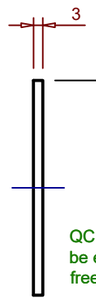

Wet sanded until it fits perfectly
Buffing not needed

QC: Wet sanded because the lasercam may leave unsmooth polygon like cuts on the circle. This can reduce glue adhesion strength and leave gaps.

QC: Surface of the Acrylic should be ensured to be scratch and dent free before and after cutting.

Laser Cut acrylic is chosen as the material because it needs to be translucent (Opal / Frosted) which acrylic is perfect for.

Outer Cover

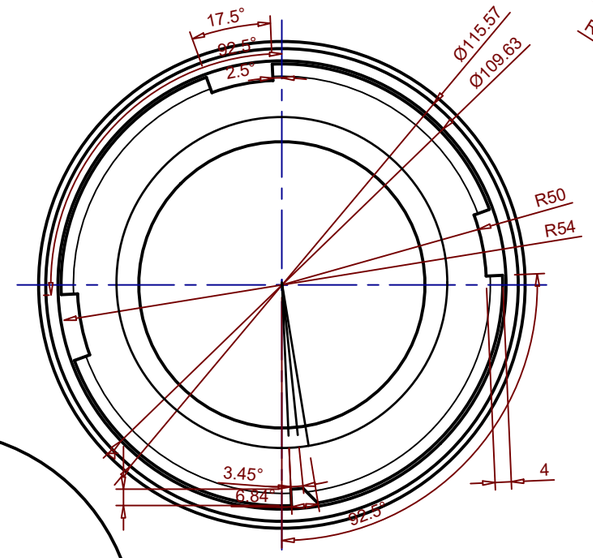

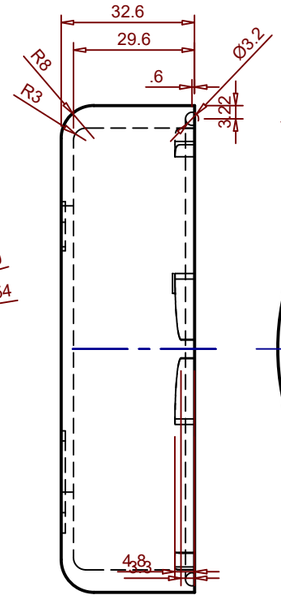

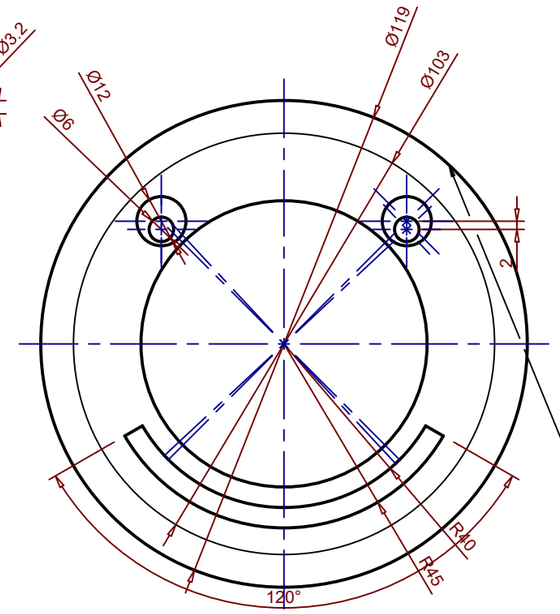

This piece is being 3D printed as it is too complex to make out of something either like Acrylic due to the tabs at the bottom and the very large chamfered edge. Wood is also not suitable at all as it will be constantly humid and exposed to the inside of a fridge.

Sand with 120-1000 grit paper to remove layer lines
Sand with 1000-5000 grit to completely smoothen surface

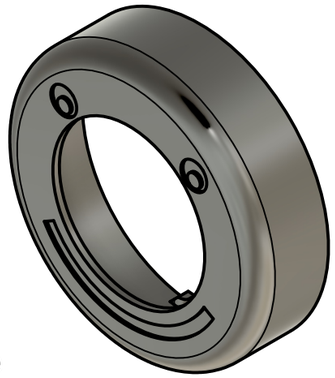

Sand with 120-1000 grit paper to remove layer lines

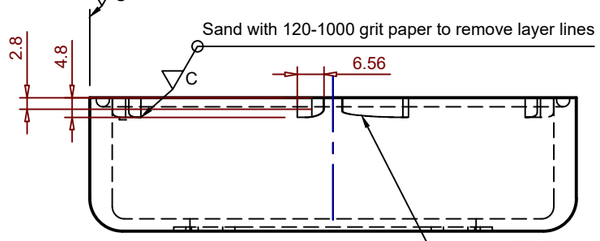

QC: Ensure that surface is completely smooth and still tilted and to the right height to provide the correct tension so that the locking feature is smooth and easy to use.

Middle Layer

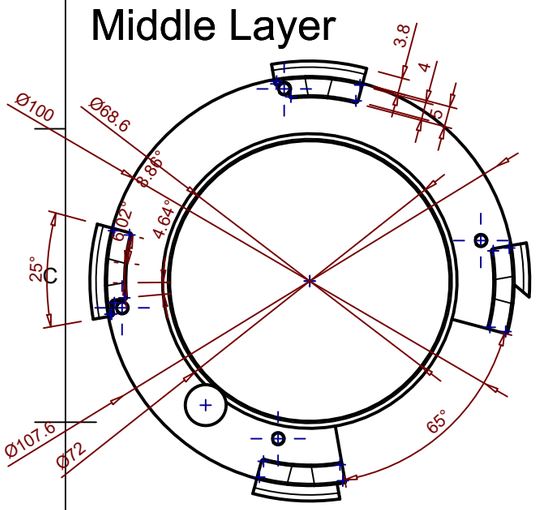

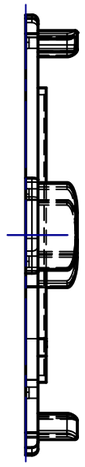

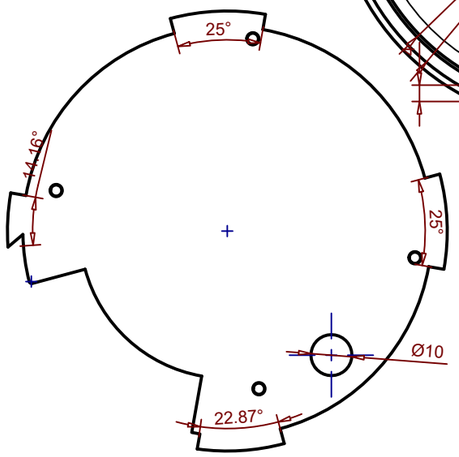

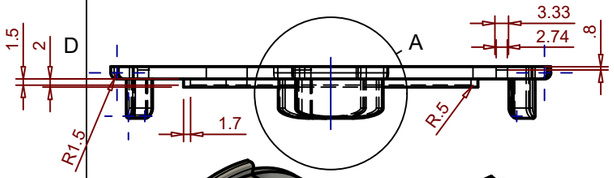

QC: Ensure that the edges of the part are sufficiently toleranced so as to slide into the outer cover easilly

Also being 3D printed due to complexity

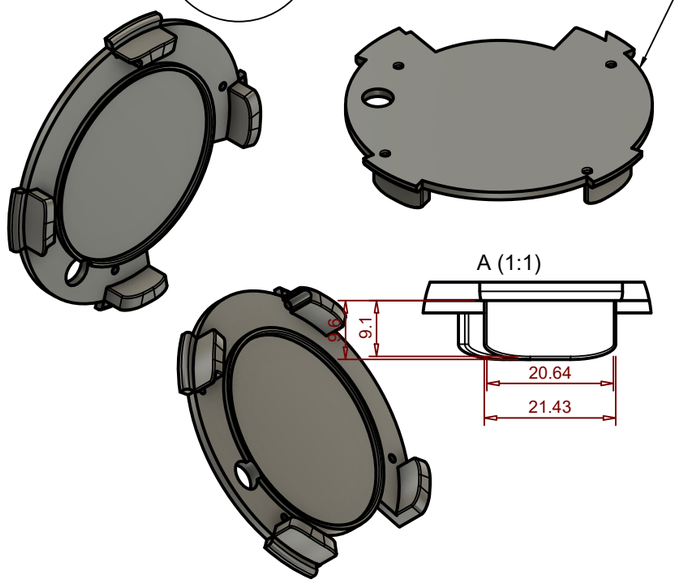

Clip hinge

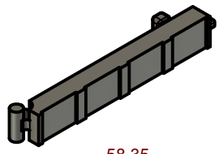

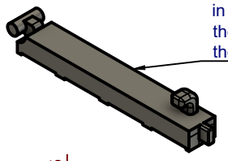

Needs to be very carefully 3D printed in the corrent orientation to ensure that the features such as the roundess of the the clip are properly maintained.

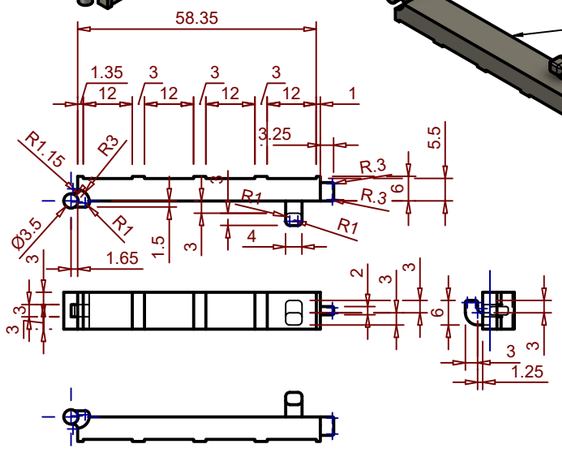

A (1:1)

Suction Covers

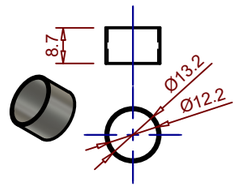

Dept.	Technical reference	Created by	Approved by
NEA		Eduard Brisca 21/12/2025	Ms. Dixon --/--/--
		Document type: WORKING DRAWING	Document status: Completed
		Title: Diffuser / Outer Cover / Clip / Suction Covers	DWG No.: NEA MAIN
			Rev. 5 / Date of issue 20/12/2025 / Sheet 2/3

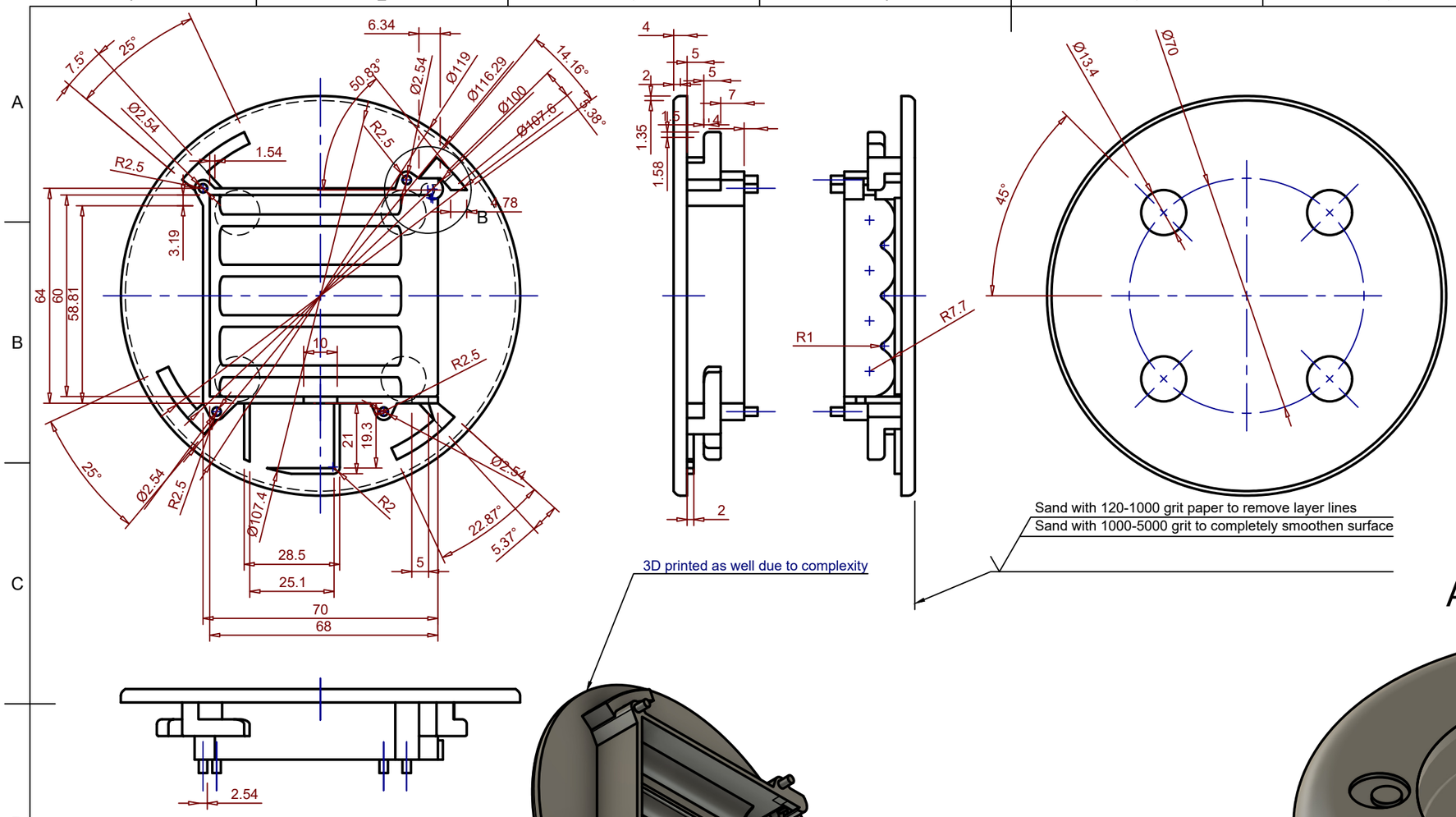

Bottom Layer

Assembled Model

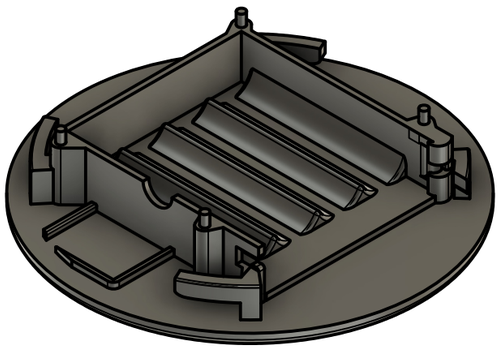

Dept.	Technical reference	Created by	Approved by
NEA		Eduard Brisca 21/12/2025	Ms. Dixon --/--/--
		Document type: WORKING DRAWING	Document status: Compelted
		Title: Bottom Layer	DWG No.: NEA MAIN
			Rev. 5 / Date of issue 05/01/2026 / Sheet 3/3